TCU VIA – 26

5.01-02 PREFABRIKATED ELEMENTS

5th Semester

5.01 CIVIL ENGINEERING CONSTRUCTION

- Heavy Walls
- Light Weight Walls
- Heavy Roofs
- Light Weight Roofs



Heavy Walls

Concrete

These walls are Sandwich elements.

It´s a complete solution with inner leaf, outer leaf and insulation.

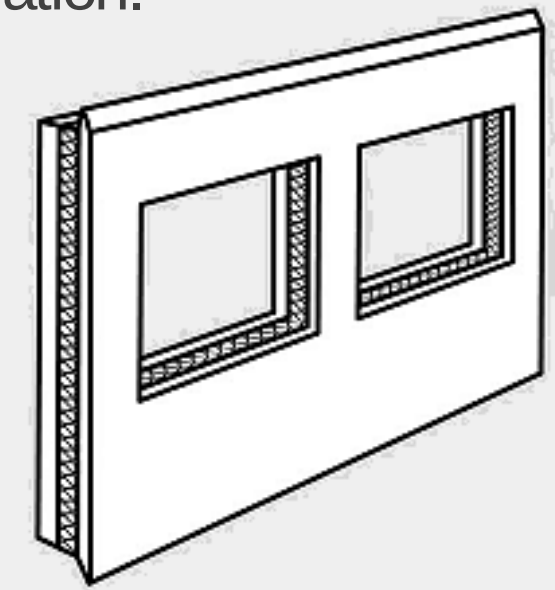



Heavy Walls

Concrete

These walls are inner leaf.

Outside there are mounted insulation and some kind of cladding – eg. Wood or steel.





Light weight Walls

Wood

These walls are made of timber frames.

It´s a complete solution with eternal cladding, insulation and internal wall surface.

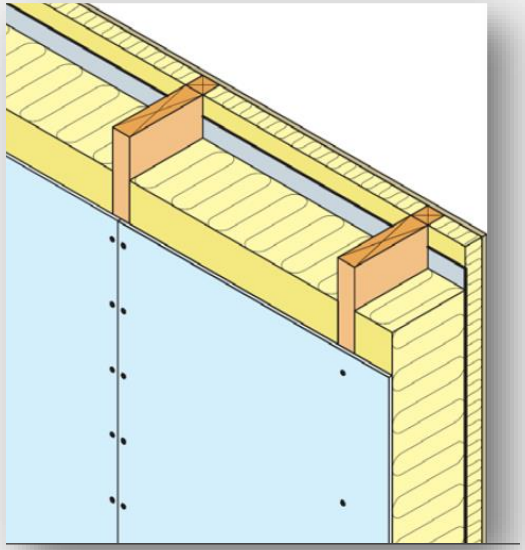





Light weight Walls

Wood



These walls are CLT walls.

Outside there are mounted insulation and some kind of cladding – eg. Wood or steel.

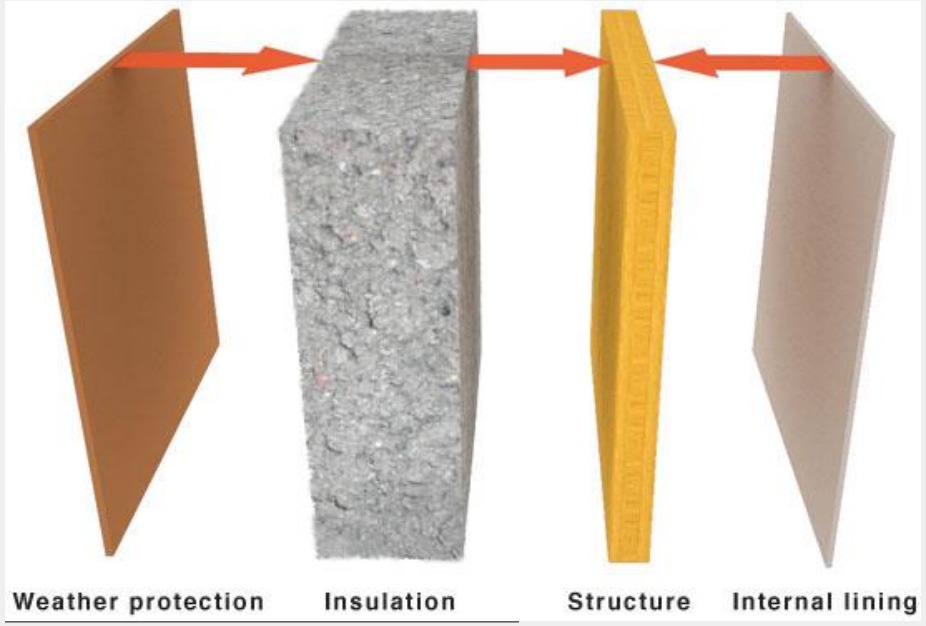



Heavy Roofs

Concrete

This type is made of hollow core slabs.

On top of the slabs there are DPM, insulation and roofing felt.



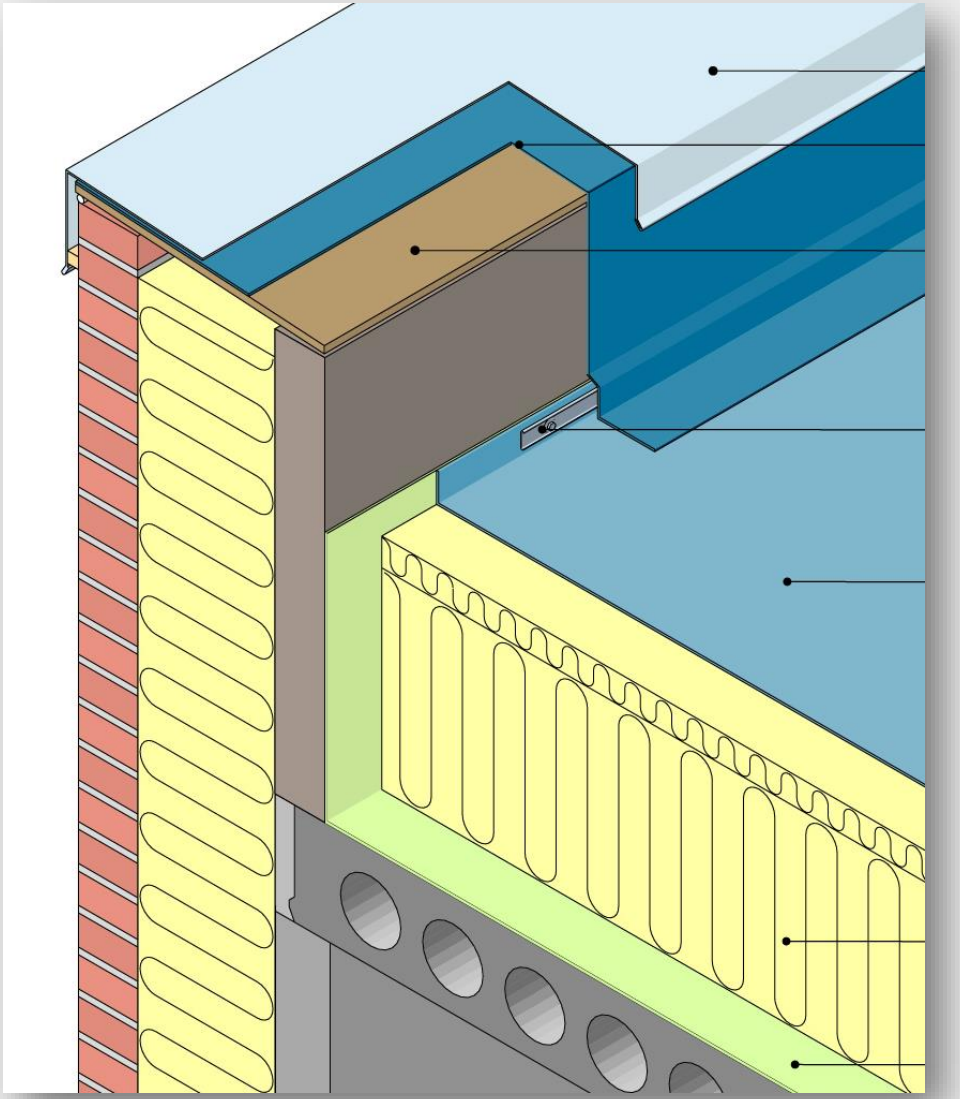

Light Weight Roofs

Steel

The loadbearing part is steel beams or trapezoidal sheets.

On top of or inside the construction there are DPM, insulation and roofing felt.





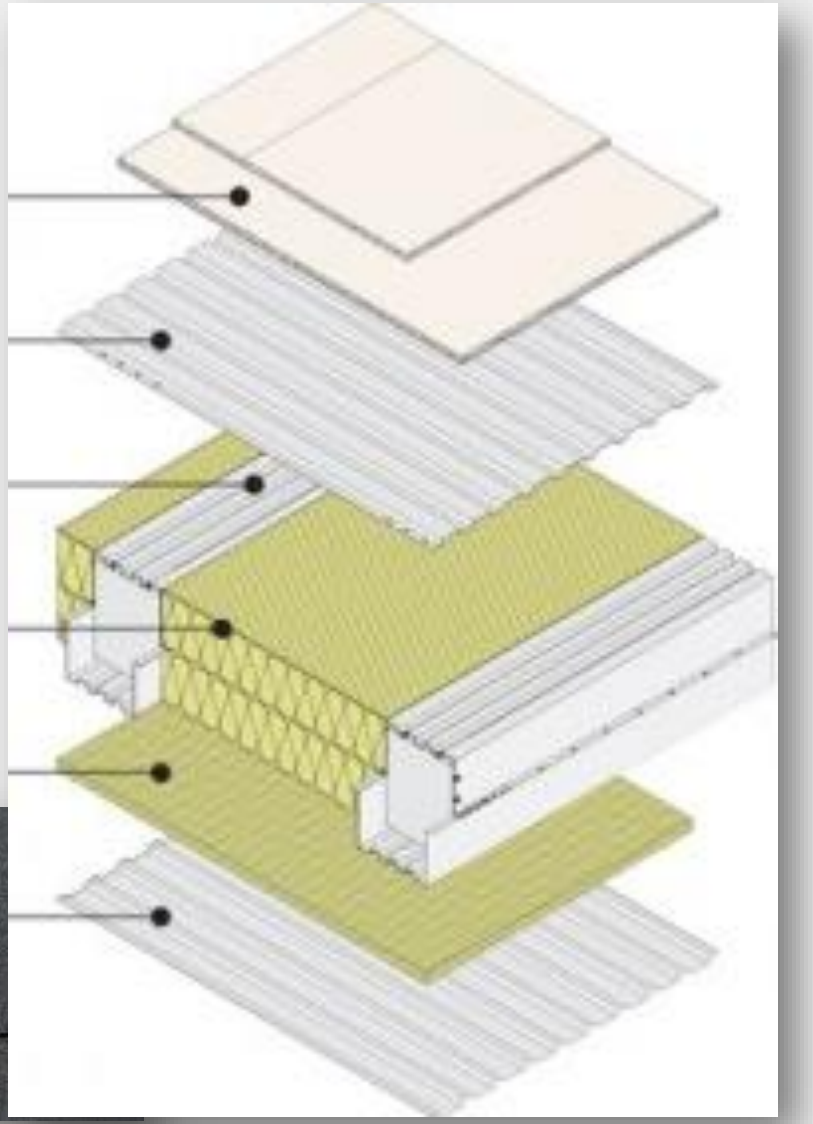

Light Weight Roofs

Wood Roofing Elements

The loadbearing part is wood beams.

Between the beams there are insulation and on top roofing felt.





Light Weight Roofs

Wood - CLT

The loadbearing part is CLT slabs.

On top there are DPM, insulation and roofing felt.



VIA University College

